PSoC

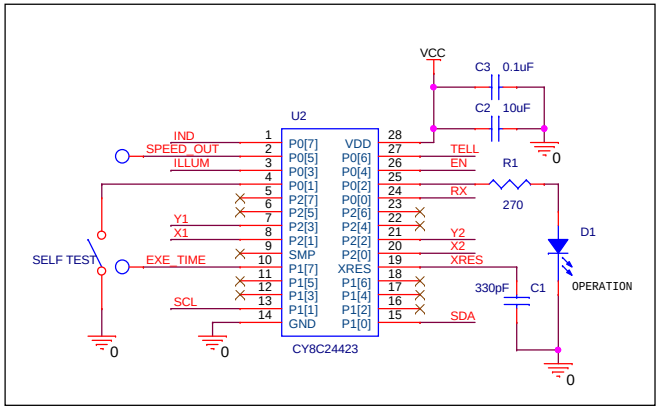

Motor Driver

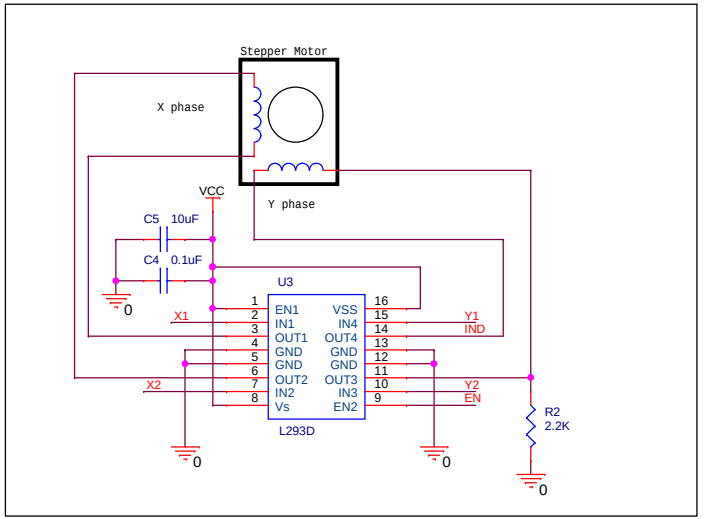

LED

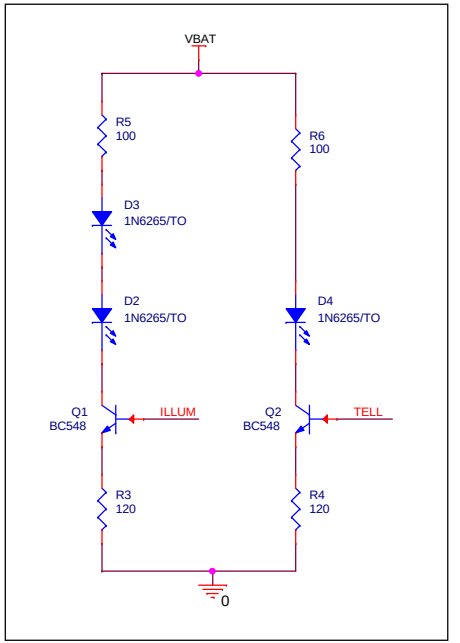

Programming Connector

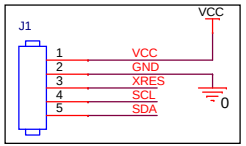

RS232 - OPTIONAL

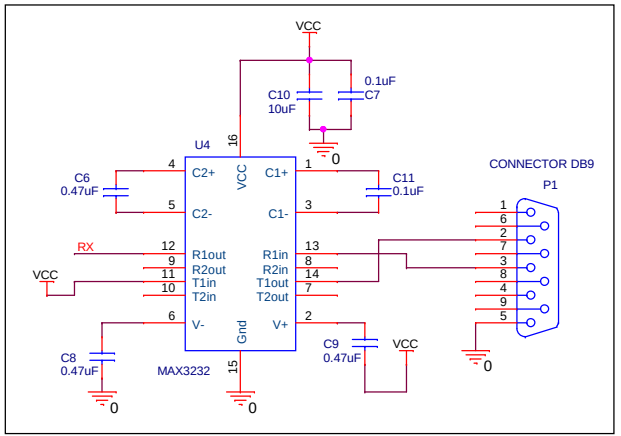

+5V Regulator

